Franke Sissons
All in One Wash Station

A unique combination of no-touch electronic water control and spout, washbasin, mirror, paper and soap dispenser in a one piece wall mounted design.

WASHROOM
SYSTEMS

FRANKE

ALL IN ONE WASH STATION

Franke Sissons' All in One Wash Station is a unique combination of no-touch electronic water control and spout, washbasin, mirror, paper and soap dispenser in a one piece wall mounted design. The compact stainless steel unit provides hygienic and user friendly washing facilities in a wide range of applications such as Hospitals, Doctor's surgeries and Medical Centres, Commercial Offices, Train stations and Airport terminals and Schools and Colleges.

The eye level dispensing element has a stainless steel mirror for durability which is mounted on a lockable door that conceals the soap and paper storage. The soap container is suitable for liquid soap and disinfecting soap and can be easily filled by the client. The paper towel dispenser uses Z folded towels and ensures that hand hygiene is maintained. Complimentary waste bins are also available from Franke Sissons.

The shallow washbasin is ideal for hand washing and is pressed to give smooth surfaces that can be easily cleaned. The unit is fixed to the wall with top mounting joggle strips and concealed bottom fixings. The overall width of 500mm makes the unit suitable for mounting on IPS type panel systems.

The infra red electronic sensor mounted underneath the spout operates when the users hands are placed in front of the sensor for a minimum of 3 seconds. The sensor and solenoid valve are supplied with an integral transformer unit for connection to 240v mains electrical supply. A Manual self closing bib tap version is available if electronic controls are not possible to be installed.

PRODUCT DETAILS

Description

G26666N	All in One wall mounted wash station with electronic water control and spout
G26670N	All in One wall mounted wash station with self closing manual bib tap

Dimensions
585mm x 500mm x 1035mm

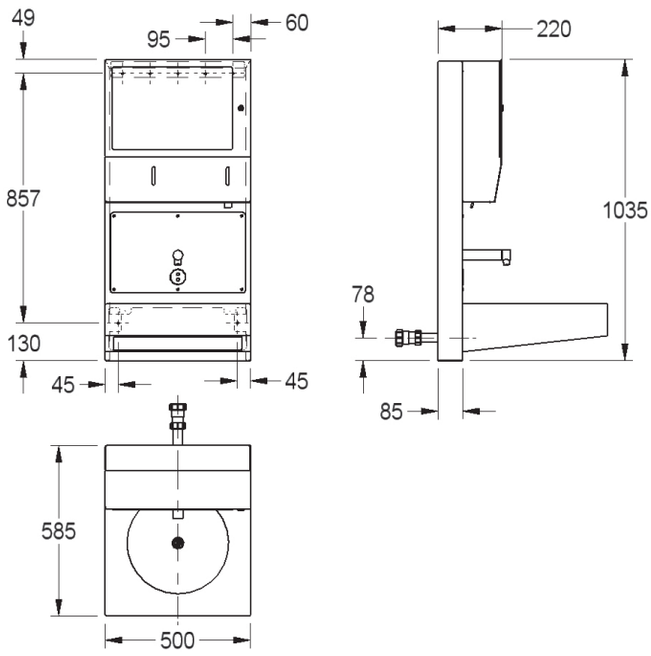

WASHROOM
SYSTEMS

FRANKE