urinals

Urinals are available in either bowl format, where each station has a wall hung bowl with individual flush and waste outlet, or in slab format where the wall is lined with fireclay slabs which drain into a floor channel with outlet. Stainless Steel options are also available. Fireclay slab ranges can be supplied to any length to line one or more walls and can be made with or without divisions between stations as required. Flushing of all types of urinal is normally by means of an automatic flushing cistern. This should have a control to suspend the flush cycles at times when the urinal facility is not in use.

application

Slab urinals provide the best protection against vandalism and misuse, particularly when fitted with a concealed cistern. They are most suitable for fixing on ground floors or concrete slab floors. Bowl urinals can be fitted in any location.

A range of Vecta stainless steel urinals is shown in the Stainless Steel section.

Lawton Road, Alsager, Stoke-on-Trent ST7 2DF, UK
Tel: +44(0) 1270 879777 Fax: +44(0) 1270 873864
www.twyfordbathrooms.com UK Technical Helpline Tel: 0870 840 0437 Fax: 0870 840 0438

urinals product selector

This selector is intended to provide guidance in selecting urinals. Suitability for specialist applications is indicated with an "X" as follows:

Commercial	Domestic	Education	Healthcare & HTM64	Hotels and Leisure	Other	Security	Special Needs

This information is for guidance only and does not preclude the selection of products for applications other than those shown. Products are listed alphabetically.

Colours available:
W = White

Urinals	***Type***	***Colours***									***Page***
Auto cisterns – VC & Plastic		W									9:1:10
Camden	Bowl	W	X		X		X	X			9:1:1
Clifton	Bowl	W	X		X		X	X			9:1:2
Idol – concealed	Bowl	W	X		X		X	X			9:1:3
Idol – exposed	Bowl	W	X		X		X	X			9:1:4
Optima	Bowl	W	X		X		X	X			9:1:5
Savoy	Bowl	W	X				X	X			9:1:6
Slab urinal	Stall	W	X				X	X	X		9:1:8
Slab urinal - exposed & concealed	Stall	W	X				X	X	X		9:1:9
Spectrum	Bowl	W	X		X	X	X	X	X		9:1:7
Other urinal components											***Page***
Traps & wastes for urinals											9:2:1
Urinal fittings											9:2:3

auto cisterns and urinals

Please note that it is a legal requirement under Schedule 2, Section 9, Paragraph 25 of the Water Regulations Advisory Scheme to install an approved urinal flush control with all auto-cisterns and urinals.

Cistermiser Ltd recommend a choice of hydraulic valve, or electronic flush control, all of which W.R.A.S. approved.

Cistermiser Ltd (Manufacturers of Water Management Controls)

for further information visit: www.cistermiser.co.uk, email: sales@cistermiser.co.uk
tel: 0118 9691611, fax: 0118 9441426

camden

shallow open bowl design with water guide channels
exposed or concealed cistern and flushpipes

Concealed Exposed

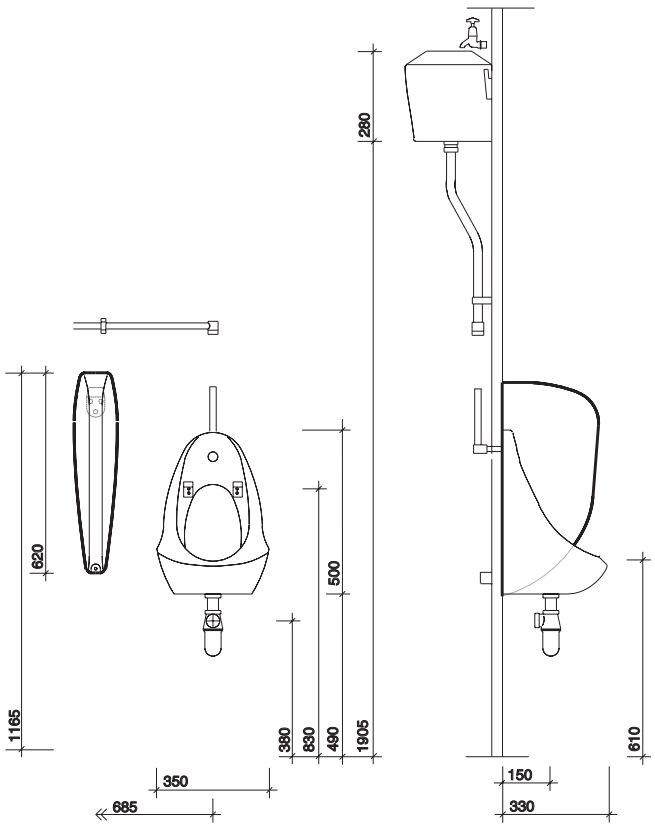

All measurements shown are in millimetres. Drawing sizes are not to scale.

to specify/order:

Please use the eight character reference shown below.

urinal

500 x 350 x 330mm	**VC7003WH**
Wall hangers	**SR5307XX**

flushpipes

Exposed flushpipes and spreaders:

1 person	**SS6071SS**
2 person	**SS6072SS**
3 person	**SS6073SS**
4 person	**SS6074SS**
5 person	**SS6075SS**

Concealed flushpipes and spreaders:

1 person	**SS6271SS**
2 person	**SS6272SS**
3 person	**SS6273SS**
4 person	**SS6274SS**
5 person	**SS6275SS**

auto cistern & fittings

No cover,

4.5L (single bowl) - VC	**CX8611WH**
9L (2/3 bowls) - VC	**CX8612WH**
14L (4/5 bowls) - VC	**CX8613WH**
4.5L (single bowl) - Plastic	**CX9121XX**
9L (2/3 bowls) - Plastic	**CX9122XX**
14L (4/5 bowls) - Plastic	**CX9123XX**

division

Division	**VC8051WH**
Wall hangers	**SR5706XX**

outlet grating

Outlet grating, 1½"	**WF9370XX**

trap

Bottle P trap, 1½" - Chrome	**WF8461CP**

applications

Commercial, Education, Hotels and Leisure, Other.

approvals

P.S.A. method of building.

material

Vitreous china.

colour

White WH.

fixings

Bowl secured to wall with hangers.
Single person cistern screwed to wall, larger cisterns supported on hangers.

Lawton Road, Alsager, Stoke-on-Trent ST7 2DF, UK
Tel: +44(0) 1270 879777 Fax: +44(0) 1270 873864
www.twyfordbathrooms.com UK Technical Helpline Tel: 0870 840 0437 Fax: 0870 840 0438

Twyford bathrooms

clifton

exposed or concealed cistern and flushpipes
compact design with deep bowl

Exposed Concealed

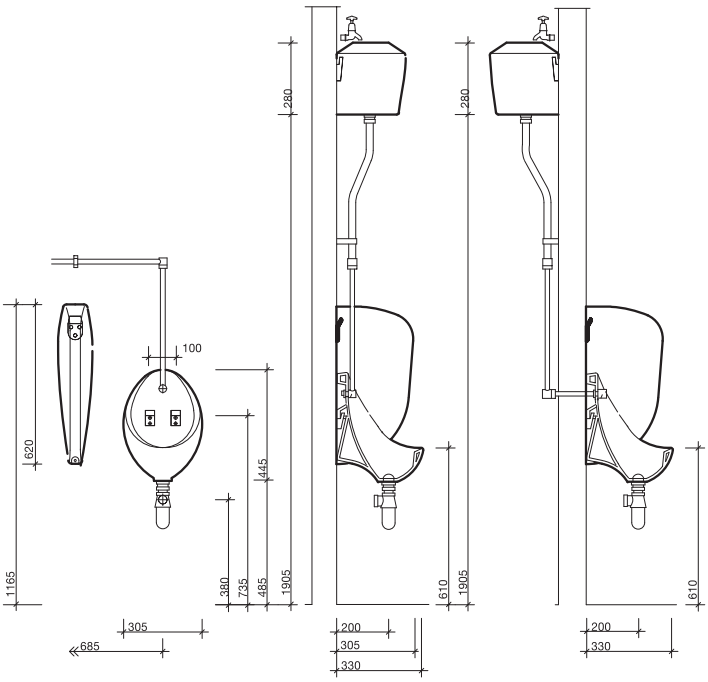

All measurements shown are in millimetres. Drawing sizes are not to scale.

to specify/order:

Please use the eight character reference shown below.

urinal

450 x 300 x 375mm	**VC7002WH**
Wall hangers	**SR5307XX**

flushpipes

Exposed flushpipes:	
1 person	**SS6071SS**
2 person	**SS6072SS**
3 person	**SS6073SS**
4 person	**SS6074SS**
5 person	**SS6075SS**
Concealed flushpipes:	
1 person	**SS6271SS**
2 person	**SS6272SS**
3 person	**SS6273SS**
4 person	**SS6274SS**
5 person	**SS6275SS**

auto cistern & fittings

No cover,	
4.5L (single bowl) - VC	**CX8611WH**
9L (2/3 bowls) - VC	**CX8612WH**
14L (4/5 bowls) - VC	**CX8613WH**
4.5L (single bowl) - Plastic	**CX9121XX**
9L (2/3 bowls) - Plastic	**CX9122XX**
14L (4/5 bowls) - Plastic	**CX9123XX**

division

Division	**VC8051WH**
Wall hangers	**SR5706XX**

outlet grating

Outlet grating, 1½"	**WF9370XX**

trap

Bottle P trap, 1½" - Chrome	**WF8461CP**

applications

Commercial, Education, Hotels and Leisure, Other.

approvals

(i) C.L.A.SP. (ii) Home Office Prison Department.

material

Vitreous china.
Stainless steel flushpipe and spreaders.

colour

White WH.

fixings

Bowl screwed to wall with hangers. Single person cistern screwed to wall, larger cisterns supported on hangers.

Lawton Road, Alsager, Stoke-on-Trent ST7 2DF, UK
Tel: +44(0) 1270 879777 Fax: +44(0) 1270 873864
www.twyfordbathrooms.com UK Technical Helpline Tel: 0870 840 0437 Fax: 0870 840 0438

Twyford bathrooms

idol concealed

washdown urinal
concealed inlet and outlet

Concealed

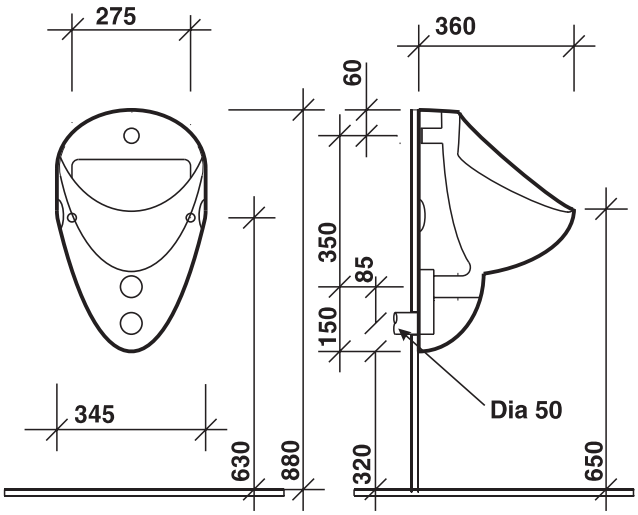

to specify/order:

Please use the eight character reference shown below.

urinal

Idol bowl urinal back inlet	**VC7005WH**
Urinal fixing bolts and covers	**SR1027WH**

mains flushing module

Mains urinal flushing module

Concealed *	**SF9310CP**
Roughing in kit	**SF9312XX**
½" bsp urinal inlet and connector	**SF9313XX**

waste kit

Urinal waste kit concealed	**WF9005XX**

direct mains only

* min. water pressure 1 bar / max. water pressure 6 bar.

applications

Commercial, Education, Hotels and Leisure, Other.

material

Vitreous china.

colour

White WH.

fixings

Bowl secured to wall with fixing bolts.

All measurements shown are in millimetres. Drawing sizes are not to scale.

Lawton Road, Alsager, Stoke-on-Trent ST7 2DF, UK
Tel: +44(0) 1270 879777 Fax: +44(0) 1270 873864
www.twyfordbathrooms.com UK Technical Helpline Tel: 0870 840 0437 Fax: 0870 840 0438

Twyford bathrooms

idol exposed

washdown urinal
exposed inlet and outlet

Exposed

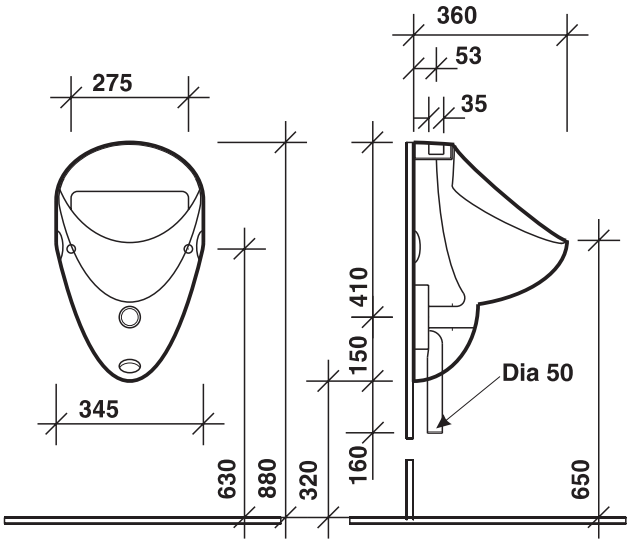

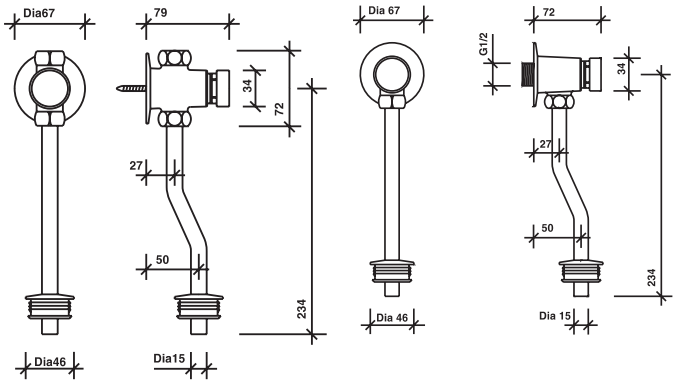

SF9306CP SF9305CP

All measurements shown are in millimetres. Drawing sizes are not to scale.

to specify/order:

Please use the eight character reference shown below.

urinal

Idol bowl urinal top inlet	**VC7006WH**
Urinal fixing bolts and covers	**SR1027WH**

a) exposed pressure valve top inlet

Exposed supply *	**SF9306CP**

b) exposed pressure valve back inlet

Concealed supply *	**SF9305CP**

waste kit

Urinal waste kit exposed	**WF9006XX**

direct mains only

* Min. water pressure 0.5 bar / max. water pressure 6 bar.

applications

Commercial, Education, Hotels and Leisure, Other.

material

Vitreous china.

colour

White WH.

fixings

Bowl secured to wall with fixing bolts.

Lawton Road, Alsager, Stoke-on-Trent ST7 2DF, UK
Tel: +44(0) 1270 879777 Fax: +44(0) 1270 873864
www.twyfordbathrooms.com UK Technical Helpline Tel: 0870 840 0437 Fax: 0870 840 0438

Twyford bathrooms

optima

short projection urinal

Optima short projection urinal

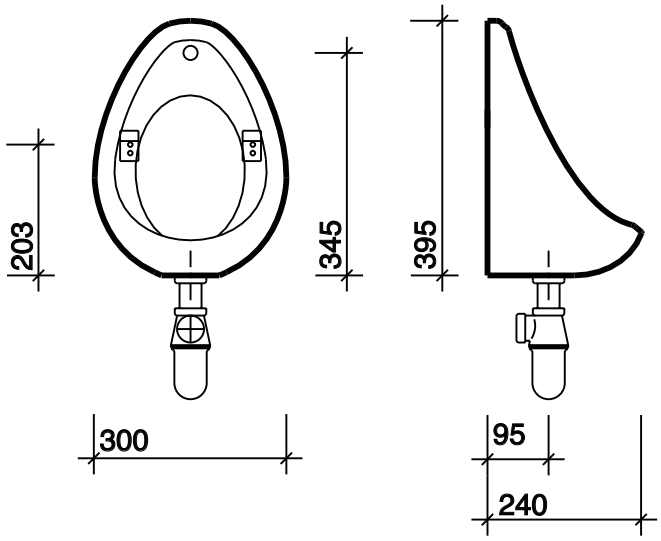

to specify/order:

Please use the eight character reference shown below.

urinal

Urinal	**VC7007WH**
Wall hangers	**SR5307XX**

flushpipes

Exposed flushpipes:

1 person	**SS6071SS**
2 person	**SS6072SS**
3 person	**SS6073SS**
4 person	**SS6074SS**
5 person	**SS6075SS**

auto cistern and fittings

No cover:

4.5L (single bowl) - VC	**CX8611WH**
9L (2/3 bowls) - VC	**CX8612WH**
4.5L (single bowl) - Plastic	**CX9121XX**
9L (2/3 bowls) - Plastic	**CX9122XX**

outlet grating

Outlet grating, 1½"	**WF9370XX**

trap

Bottle P trap, 1½" - Chrome	**WF8461CP**

applications

Commercial, Education, Hotels and Leisure, Other.

material

Vitreous china.

colour

White WH.

fixings

Bowl screwed to wall with hangers. Single person cistern screwed to wall, larger cisterns supported on hangers.

All measurements shown are in millimetres. Drawing sizes are not to scale.

Lawton Road, Alsager, Stoke-on-Trent ST7 2DF, UK
Tel: +44(0) 1270 879777 Fax: +44(0) 1270 873864
www.twyfordbathrooms.com UK Technical Helpline Tel: 0870 840 0437 Fax: 0870 840 0438

Twyford bathrooms

savoy

deep sides and bowl for privacy of use

designed for use with electronic flush

Savoy urinal

to specify/order:

Please use the eight character reference shown below.

urinal

700 x 460 x 325mm
Top inlet
Complete with vitreous china and grating **VC7110WH**

Back inlet
Complete with vitreous china and grating **VC7112WH**

Hangers **SR5706XX**

applications

Commercial, Hotels and Leisure, Other.

material

Vitreous china.

colour

White WH.

fixings

Bowl supplied with vitreous china grating.

This product is not available in the UK and does not comply with UK water regulations.

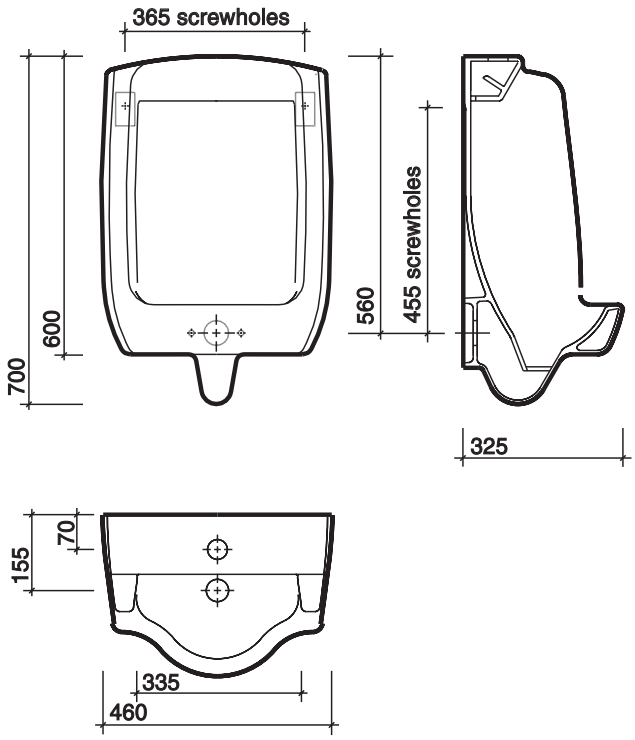

All measurements shown are in millimetres. Drawing sizes are not to scale.

Lawton Road, Alsager, Stoke-on-Trent ST7 2DF, UK
Tel: +44(0) 1270 879777 Fax: +44(0) 1270 873864
www.twyfordbathrooms.com UK Technical Helpline Tel: 0870 840 0437 Fax: 0870 840 0438

Twyford bathrooms

spectrum

fully concealed cistern, flushpipes and waste pipes
designed for panel faced ducts

Spectrum urinal bowl

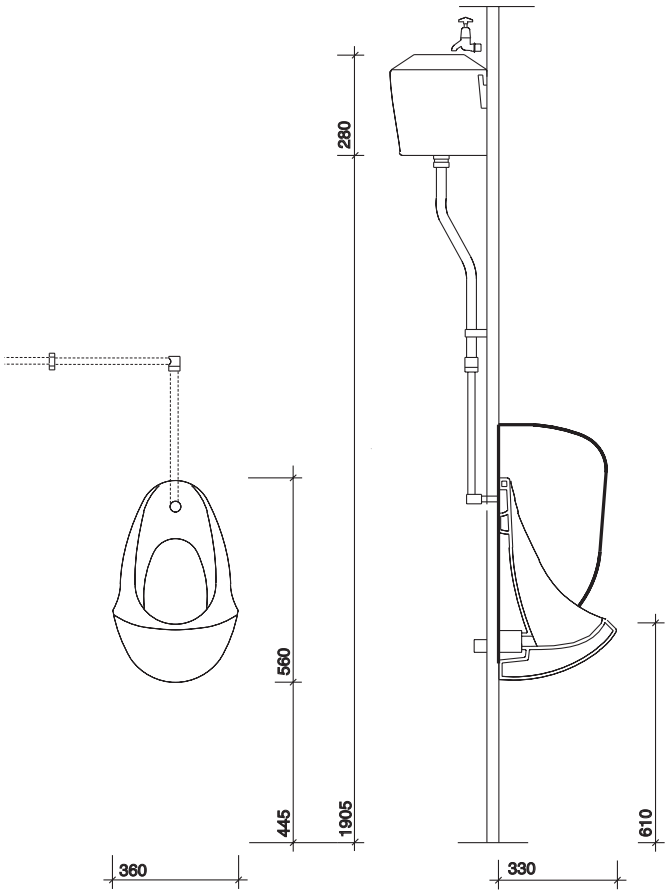

to specify/order:

Please use the eight character reference shown below.

urinal

560 x 360 x 330mm	**VC7004WH**

flushpipes

Concealed flushpipes:

1 person	**SS6271SS**
2 person	**SS6272SS**
3 person	**SS6273SS**
4 person	**SS6274SS**
5 person	**SS6275SS**

auto cistern and fittings

No cover:

4.5L (single bowl) - VC	**CX8611WH**
9L (2/3 bowls) - VC	**CX8612WH**
14L (4/5 bowls) - VC	**CX8613WH**
4.5L (single bowl) - Plastic	**CX9121XX**
9L (2/3 bowls) - Plastic	**CX9122XX**
14L (4/5 bowls) - Plastic	**CX9123XX**
Division	**VC8051WH**
Hangers	**SR5706XX**

urinal fixing kit

Fixing kit including ZP6678XX plastic waste/grating	**SR8096XX**
Low projection conversion kit for SR8096XX	**WF4081XX**

applications

Commercial, Education, Healthcare, Hotels and Leisure, Other, Security.

approvals

H.T.M. 64, code URH.

material

Vitreous china.

colour

White WH.

fixings

Bowl fitted on concealed hangers onto panels up to 20mm thick.

All measurements shown are in millimetres. Drawing sizes are not to scale.

Lawton Road, Alsager, Stoke-on-Trent ST7 2DF, UK
Tel: +44(0) 1270 879777 Fax: +44(0) 1270 873864
www.twyfordbathrooms.com UK Technical Helpline Tel: 0870 840 0437 Fax: 0870 840 0438

Twyford bathrooms

slab urinal stalls

urinal stalls in modular packs
flexible installation dimensions

Slab urinal stalls

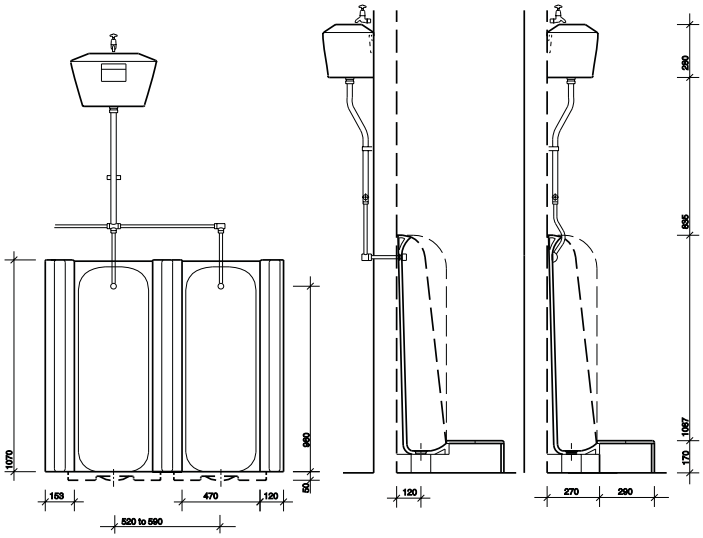

All measurements shown are in millimetres. Drawing sizes are not to scale.

to specify/order:

Please use the eight character reference shown below.

individual components:

urinals

Urinal back slab	**FC5691WH**
End division L/H	**FC5676WH**
End division R/H	**FC5677WH**
Central division	**FC5678WH**

flushpipes

Exposed:

1 person	**SS6151SS**
2 person	**SS6152SS**
3 person	**SS6153SS**
4 person	**SS6154SS**
5 person	**SS6155SS**

concealed:

1 person	**SS6161SS**
2 person	**SS6162SS**
3 person	**SS6163SS**
4 person	**SS6164SS**
5 person	**SS6165SS**

auto cistern & fittings

No cover,

4.5L (single bowl) - VC	**CX8611WH**
9L (2/3 bowls) - VC	**CX8612WH**
14L (4/5 bowls) - VC	**CX8613WH**
4.5L (single bowl) - Plastic	**CX9121XX**
9L (2/3 bowls) - Plastic	**CX9122XX**
14L (4/5 bowls) - Plastic	**CX9123XX**

waste

Urinal waste	**WF9371SS**

optional extras

Installation kit, comprising black tile treads, white riser tiles and fireclay grout:

Upto 2 persons	**FC9202XX**
Upto 4 persons	**FC9204XX**
Upto 6 persons	**FC9206XX**

applications

Commercial, Hotels and Leisure, Other, Security.

material

Enammelled fireclay.

colours

White WH.

Lawton Road, Alsager, Stoke-on-Trent ST7 2DF, UK
Tel: +44(0) 1270 879777 Fax: +44(0) 1270 873864
www.twyfordbathrooms.com UK Technical Helpline Tel: 0870 840 0437 Fax: 0870 840 0438

Twyford bathrooms

exposed & concealed slab urinal

applications

Commercial, Hotels and Leisure, Other, Security.

Exposed slab urinal

TO ORDER:		URINAL					CISTERN			
PACK NUMBER	NUMBER OF PERSONS	URINAL SLAB FC5691WH	RH END FC5677WH	LH END FC5676WH	DIVISION FC5678WH	WASTE	CISTERN-VC	CISTERN-PLASTIC	EXPOSED FLUSHPIPES & SPREADERS	RANGE DIMENSIONS MIN & MAX
FC5101WH	1 PERSON	1	1	1	NA	1	1 OFF CX8611WH	1 OFF CX9121XX	1 OFF SS6151SS	MIN 0.61M MAX 0.68M
FC5102WH	2 PERSON	2	1	1	1	2	1 OFF CX8611WH	1 OFF CX9121XX	1 OFF SS6152SS	MIN 1.13M MAX 1.27M
FC5103WH	3 PERSON	3	1	1	2	3	1 OFF CX8612WH	1 OFF CX9122XX	1 OFF SS6153SS	MIN 1.65M MAX 1.86M
FC5104WH	4 PERSON	4	1	1	3	4	1 OFF CX8613WH	1 OFF CX9123XX	1 OFF SS6154SS	MIN 2.17M MAX 2.45M
FC5105WH	5 PERSON	5	1	1	4	5	1 OFF CX8613WH	1 OFF CX9123XX	1 OFF SS6155SS	MIN 2.69M MAX 3.04M
FC5106WH	6 PERSON	6	1	1	5	6	2 OFF CX8612WH	2 OFF CX9122XX	2 OFF SS6153SS	MIN 3.21M MAX 3.63M
FC5107WH	7 PERSON	7	1	1	6	7	1 OFF CX8612WH 1 OFF CX8613WH	1 OFF CX9121XX 1 OFF CX9121XX	1 OFF SS6153SS 1 OFF SS6154SS	MIN 3.73M MAX 4.22M

Concealed slab urinal

TO ORDER:		URINAL					CISTERN			
PACK NUMBER	NUMBER OF PERSONS	URINAL SLAB FC5691WH	RH END FC5677WH	LH END FC5676WH	DIVISION FC5678WH	WASTE WF93715S	CISTERN-VC	CISTERN-PLASTIC	EXPOSED FLUSHPIPES & SPREADERS	RANGE DIMENSIONS MIN & MAX
FC5111WH	1 PERSON	1	1	1	NA	1	1 OFF CX8611WH	1 OFF CX9121XX	1 OFF SS6161SS	MIN 0.61M MAX 0.68M
FC5112WH	2 PERSON	2	1	1	1	2	1 OFF CX8611WH	1 OFF CX9121XX	1 OFF SS6162SS	MIN 1.13M MAX 1.27M
FC5113WH	3 PERSON	3	1	1	2	3	1 OFF CX8612WH	1 OFF CX9122XX	1 OFF SS6163SS	MIN 1.65M MAX 1.86M
FC5114WH	4 PERSON	4	1	1	3	4	1 OFF CX8613WH	1 OFF CX9123XX	1 OFF SS6164SS	MIN 2.17M MAX 2.45M
FC5115WH	5 PERSON	5	1	1	4	5	1 OFF CX8613WH	1 OFF CX9123XX	1 OFF SS6165SS	MIN 2.69M MAX 3.04M
FC5116WH	6 PERSON	6	1	1	5	6	2 OFF CX8612WH	2 OFF CX9122XX	2 OFF SS6163SS	MIN 3.21M MAX 3.63M
FC5127WH	7 PERSON	7	1	1	6	7	1 OFF CX8612WH 1 OFF CX8613WH	1 OFF CX9122XX 1 OFF CX9123XX	1 OFF SS6163SS 1 OFF SS6164SS	MIN 3.73M MAX 4.22M

to specify/order:

To specify or order a range of slab urinal stalls, with concealed or exposed supply fittings, use the appropriate matrix to specify or order a modular pack, per person, complete with end divisions, central divisions, waste, cistern, flushpipes and spreaders. The final column details the minimum and maximum range dimensions for each range. If required, individual products can be ordered separately.

optional extras

Installation kit, comprising black tile treads, white riser tiles and fireclay grout:

Upto 2 persons	**FC9202XX**
Upto 4 persons	**FC9204XX**
Upto 6 persons	**FC9206XX**

All measurements shown are in millimetres. Drawing sizes are not to scale.

Lawton Road, Alsager, Stoke-on-Trent ST7 2DF, UK
Tel: +44(0) 1270 879777 Fax: +44(0) 1270 873864
www.twyfordbathrooms.com UK Technical Helpline Tel: 0870 840 0437 Fax: 0870 840 0438

Twyford bathrooms

automatic cisterns

flushing cycle controlled by rate of water refill
concealed fixings

Automatic cisterns (VC illustrated)

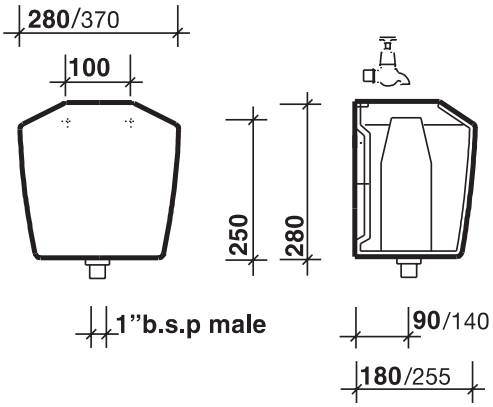

VC - 4.5 and 9 litre cistern

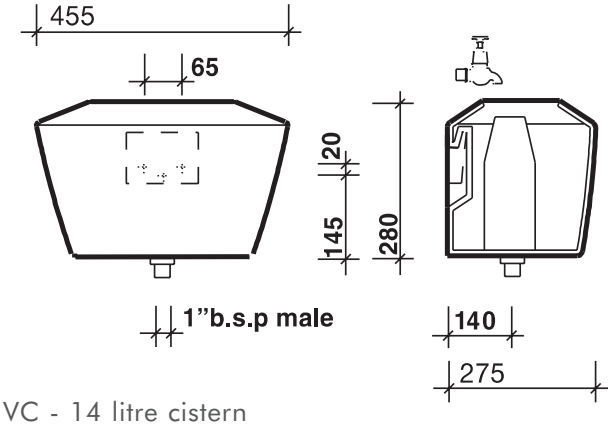

VC - 14 litre cistern

All measurements shown are in millimetres. Drawing sizes are not to scale.

to specify/order:

Please use the eight character reference shown below.

auto cistern & fittings

No cover,

4.5L (single bowl) - VC	**CX8611WH**
9L (2/3 bowls) - VC	**CX8612WH**
14L (4/5 bowls) - VC	**CX8613WH**
4.5L (single bowl) - Plastic	**CX9121XX**
9L (2/3 bowls) - Plastic	**CX9122XX**
14L (4/5 bowls) - Plastic	**CX9123XX**

applications

Suitable for all bowl and slab urinals.

material

Vitreous china or Plastic.

colours

White WH.

fixings

VC: 4.5L and 9L cistern screwed to wall.
14L cistern fitted with wall hanger provided.
Plastic: Cistern screwed to wall.

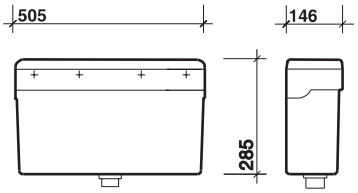

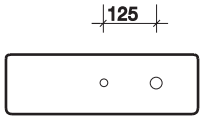

Plastic - all sizes.

Lawton Road, Alsager, Stoke-on-Trent ST7 2DF, UK
Tel: +44(0) 1270 879777 Fax: +44(0) 1270 873864
www.twyfordbathrooms.com UK Technical Helpline Tel: 0870 840 0437 Fax: 0870 840 0438

Twyford bathrooms

traps & waste for urinals

to specify/order:
Please use the eight character reference shown below

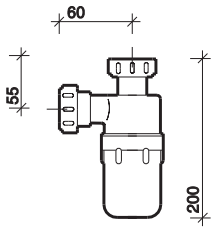

Plastic bottle P trap

bottle P trap
1½" P outlet **WF8483XX**

applications
Suitable for camden and clifton urinal bowls.

material
Plastic.

colours
White XX.

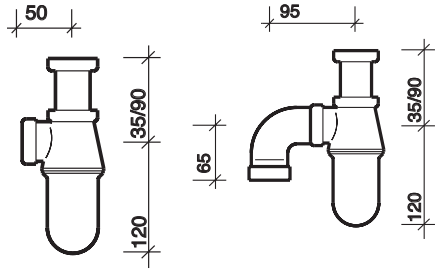

Bottle trap

bottle trap
1½", P trap, 75mm seal **WF8461CP**

applications
Suitable for camden, clifton and optima urinal bowls.

material
Brass.

finish
Chrome plated CP.

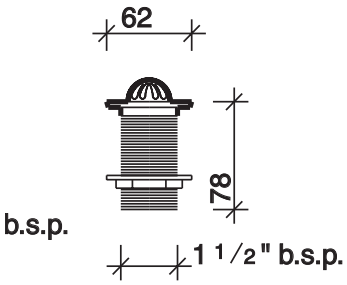

Domed outlet grating

domed outlet grating
1½" chrome plated **WF9362CP**

applications
Suitable for camden and clifton urinal bowls.

finishes
Chrome plated and plastics.

colours
Chrome plated CP.

All measurements shown are in millimetres. Drawing sizes are not to scale.

Lawton Road, Alsager, Stoke-on-Trent ST7 2DF, UK
Tel: +44(0) 1270 879777 Fax: +44(0) 1270 873864
www.twyfordbathrooms.com UK Technical Helpline Tel: 0870 840 0437 Fax: 0870 840 0438

Twyford bathrooms

traps for urinals

to specify/order:
Please use the eight character reference shown below

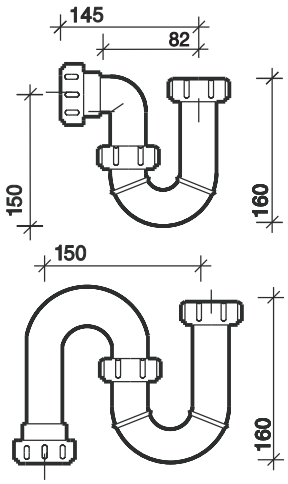

Tubular trap

tubular S and P traps

1½" S outlet	**WF8492XX**
1½" P outlet	**WF8493XX**

applications

Suitable for camden and clifton urinal bowls.

material

Plastics.

colours

White XX.

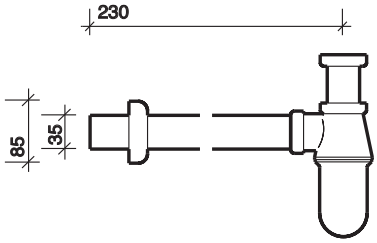

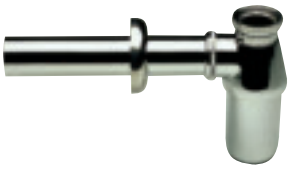

Trap and extension to floor with wall flange

trap and extension to wall with wall flange

1½" extension pipe to wall with flange	**WF8468CP**

material

Brass.

finish

Chrome plated CP.

note

The above reference numbers do not include the trap. Please specify **WF8461CP** separately.

All measurements shown are in millimetres. Drawing sizes are not to scale.

Lawton Road, Alsager, Stoke-on-Trent ST7 2DF, UK
Tel: +44(0) 1270 879777 Fax: +44(0) 1270 873864
www.twyfordbathrooms.com UK Technical Helpline Tel: 0870 840 0437 Fax: 0870 840 0438

Twyford bathrooms

urinal fittings

to specify/order:
Please use the eight character reference shown below

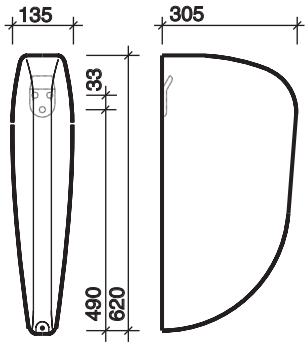

Urinal division

Urinal division	**VC8051WH**
Hangers	**SR5706XX**

applications
For use with camden, clifton and spectrum urinal bowls.

approvals
P.S.A. method of building.

material
Vitreous china BS3402.

colours
White WH.

fixing
Screw to wall and fitted on hanger using 2½" no. 10 non-ferrous woodscrews, not provided or wall hangers.

All measurements shown are in millimetres. Drawing sizes are not to scale.

Lawton Road, Alsager, Stoke-on-Trent ST7 2DF, UK
Tel: +44(0) 1270 879777 Fax: +44(0) 1270 873864
www.twyfordbathrooms.com UK Technical Helpline Tel: 0870 840 0437 Fax: 0870 840 0438

Twyford bathrooms