Covered Canopies, walkways & shelters

AUTOPA®
VELOPA®
AUTOPA
2010

Covered canopies

2.5m Door canopy

Introducing Autopa's new range of covered walkways and canopies. These stylish, yet functional structures are adaptable in both length and width, allowing a variety of applications. Ideal for businesses and schools alike, to provide sheltered outdoor areas or covered link ways between buildings. Made from galvanised mild steel, and available colour coated, these attractive structures can blend in to a site, or become a feature on their own.

Designed to BS5950 (Structural Use of Steel in Buildings), these robust structures offer a practical, attractive and versatile solution to covering outdoor areas. The roofing material is a 5mm thick transparent PETG, which is designed with vandal resistance in mind. The transparency minimises loss of light underneath the structure.

2.5m Door canopy

2.5m Door canopy

Model	Part no. Main bay Galvanised	Part no. Extn bay Galvanised	Overall width mm	Centres mm	Depth mm	Height above ground mm
1500mm wide	138220150	138220155	1750	1500	1060	2598
2500mm wide	138220250	138220255	2750	2500	1060	2598
3500mm wide	138220350	138220355	3750	3500	1060	2598

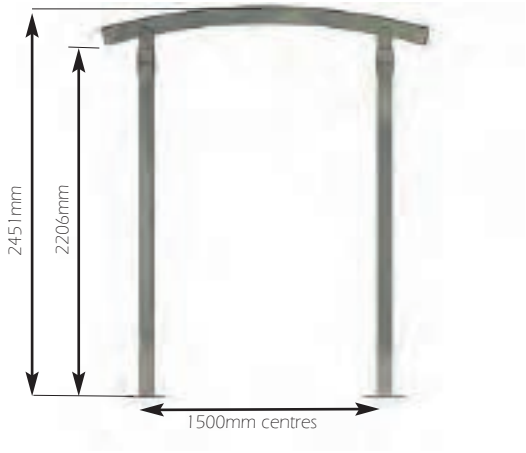

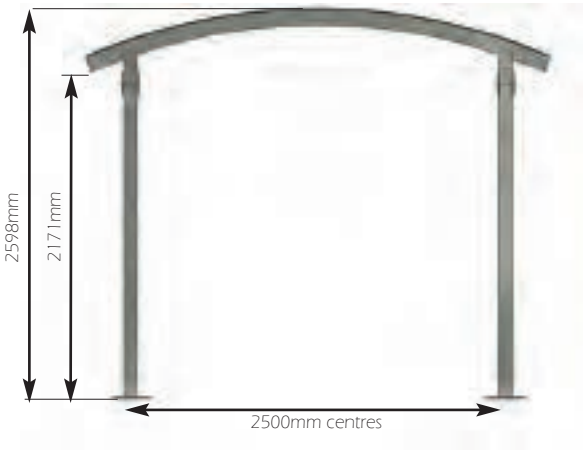

Covered walkways

1.5m walkway

- Walkways are free standing.
- Canopies are wall and ground fixed.
- Available in 1.5m, 2.5m and 3.5m widths;
- Walkway Main bays are 4.0m in length, Canopies are 1m.
- Extension bays available.
- Uprights and cross beams made of 90mm x 90mm box section. Arches made of 100mm x 60mm box section.
- Roof cladding is clearview PET 5mm thick sheeting, (clamped in position to maintain rigidity).
- Shipped in kit-form for easy assembly on site.
- Available ragged for casting-in or flanged for bolting down.
- Guttering: the walkways are supplied as standard without rainwater guttering, however this is available at an extra charge.
- PET side-panelling is available at an extra charge to provide lateral weather protection.

Full site consultation and survey is available, free of charge.

1.5m Walkway with guttering

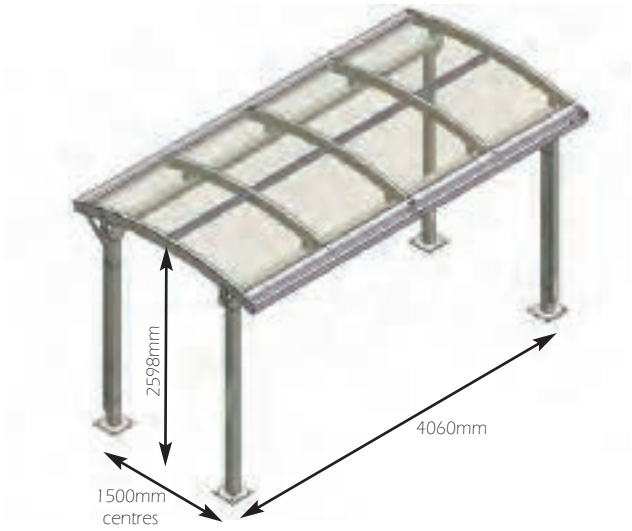

1.5m Walkway with guttering

Model	Part no. Galvanised	Part no. Extn bay Galvanised	Overall length mm	Centres mm	Depth mm	Height above ground mm
1500mm wide	138221150	138221155	1750	1500	4060	2598
2500mm wide	138221250	138221255	2750	2500	4060	2598
3500mm wide	138221350	138221355	3750	3500	4060	2598

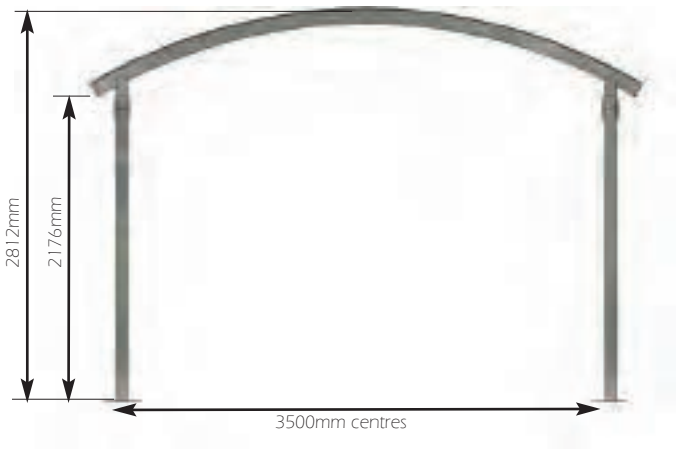

Installation

Supplied in component form for easy installation. Cladding/roofing needs to be drilled/fixed on site. **Sheeting is clamped to frame using clamping strips.** Legs can be flanged for bolting down to a suitable concrete base (400mm cube minimum), or with ragged ends for casting into the ground.

Ground fixing bolts can be supplied extra.
Flanged version - 4 x 16mm bolts required per flange
Ragged version - Excavate a hole 1600mm x 500mm x 400mm deep for casting in each end.

Wimbledon teenage shelters

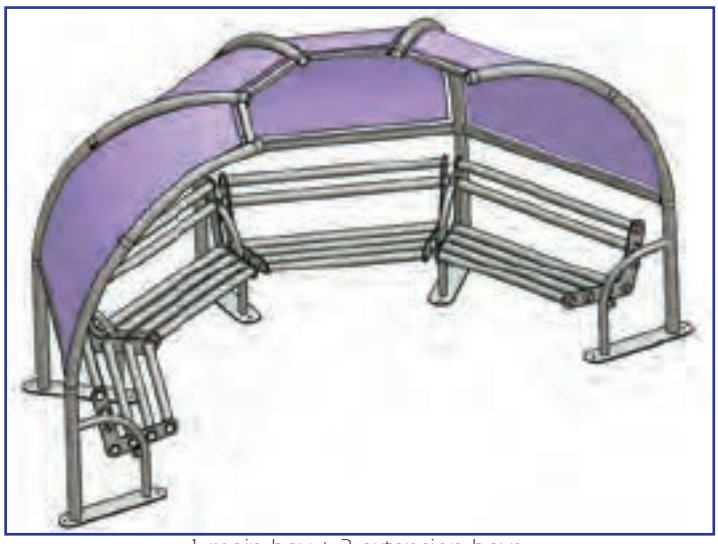

1 main bay + 3 extension bays

1 main bay + 1 extension bay

2 main bays + 2 extensions

4 main bays

- Free standing modular design shelter.
- Available in a wide variety of configurations to suit site requirements.
- 2298mm overall height.
- 2218mm max headroom height.
- 500mm seat height.
- Arches made of 76mm galvanised mild steel tube.
- Seat made of 60mm galvanised mild steel tube.
- Side paneling of mild steel, galvanised finish as standard.
- Shipped in kit-form for easy assembly on site.
- Available ragged for casting-in or flanged for bolting down.
- Colour coated finishes available extra.
- Recommended centre gap for individual bays is1500mm.

Full site consultation and survey is available, free of charge.

Other configurations are available.

Model	Part no. Main bay	Part no. Extn bay	Overall length mm (A)	Depth mm (B)	Inner length mm (C)
Galvanised finish	138222150	138222155	1722	1438	650

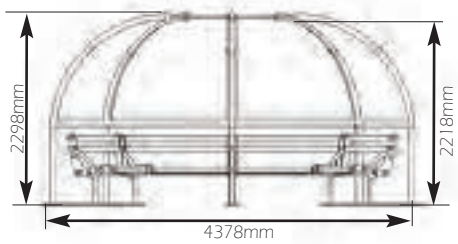

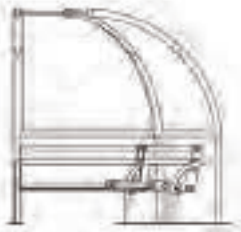

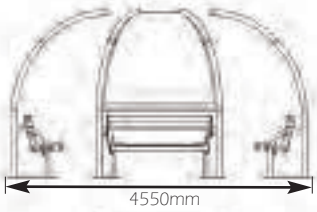

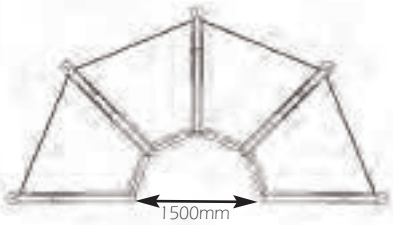

1 main bay + 3 extension bays

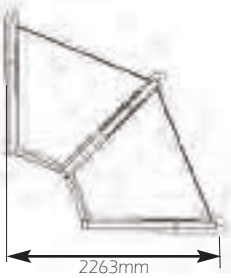

1 main bay + 1 extension bay

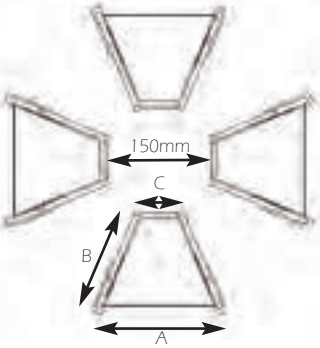

4 main bays

Hampton teenage shelters

1 main bay

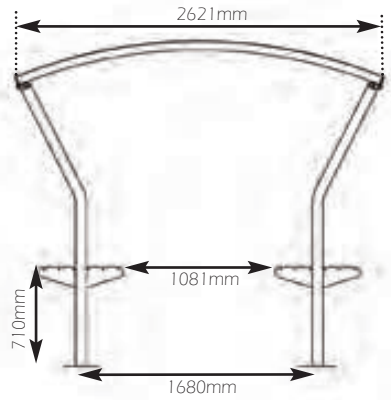

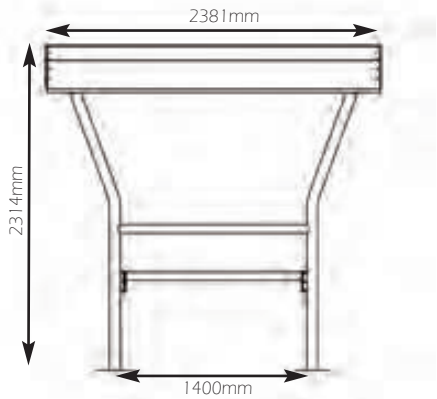

- Free standing design shelter.
- Available with extension bays.
- 2314mm overall height.
- 2381mm overall width.
- 2621mm overall length.
- Arches made of 76mm galvanised mild steel tube.
- Seat made of 3mm mild steel plate..
- Roof paneling of mild steel, galvanised finish as standard.
- Shipped in kit-form for easy assembly on site.
- Available ragged for casting-in or flanged for bolting down.
- Colour coated finishes available extra.

Full site consultation and survey is available, free of charge.
Other configurations are available.

Model	Part no. Main bay	Part no. Extn bay	Overall length mm	Depth mm	Height mm
Galvanised finish	138222250	138222255	2621	2381	2314

Installation

Supplied in component form for easy installation. Cladding/roofing needs to be fixed on site. Legs can be flanged for bolting down to a suitable concrete base (400mm cube minimum), or with ragged ends for casting into the ground.

Ground fixing bolts can be supplied extra.
Flanged version - 4 x 16mm bolts required per flange
Ragged version - Excavate a hole 1600mm x 500mm x 400mm deep for casting in each end.

Smoking & waiting shelters

2x1m Waiting Shelter

2x2m Smoking Shelter

Smoking Shelters are 50% enclosed, making them compliant with UK & Irish legislation.

Waiting shelters are fully enclosed shelters suitable for a variety of applications.

- Offer wind and rain protection.
- Smoking shelters help to promote a smoke free workplace.
- Made from Strong Aluminium frame.
- Powder coated finish, black as standard.
- Other colours available on request.
- Side panels made of 5mm vandal resistant, self extinguishing clear PET glazing.
- Glazing is UV stable.
- For bolting down only.
- Adjustable foot fixing for uneven surfaces (adjustable by 70mm).
- **Location of smoking shelters in relation to other structures can affect their compliance.**
- Perch bench option available extra.
- Ashtrays are included inside the smoking shelters.

2x5m smoking Shelter

Ashtray included

Installation

Supplied in component form for easy installation.
The shelters must be bolted to a suitable concrete pad.
1 no 10mm bolts required per leg. Fixing bolts available extra.
Full installation instructions available on request.

Size	Smoking shelter Part no. Black finish	Waiting shelter Part no. Black finish	Overall height mm	Length mm	Width mm	No. of ashtrays (smoking shelter)	maximum occupancy
2x1m	138000215	138000100	2330	1050	2050	1	3
2x2m	138000225	138000200	2330	2050	2050	2	6
2x3m	138000235	138000230	2330	3050	2050	3	9
2x4m	138000245	138000240	2330	4050	2050	4	12
2x5m	138000255	138000250	2330	5050	2050	5	15
2x6m	138000265	138000260	2330	6050	2050	6	18
Perch bench	138000050		700	1900	150	-	-

Wall mounted ashtray

External wall cigarette disposal bin has a new improved design for easier use. Powder coated 'Zintec' steel body with textured finish, the ashtray features stubbing area, rain hood and integral ash collection box. The door is lockable with universal key. Comes supplied with fixing kit.

- Height 390mm
- Width 280mm
- Depth 140mm

Part number: 138174142