Crash Doors

DP Industrial Services' high specification Crash Doors are designed for heavy duty internal use. A choice of PVC or rubber panels in varying thicknesses is available, as every door is made to each customer's individual requirements, with delivery in 5 to 7 days.

Construction is of materials specially selected to withstand the rigours of daily use, making them ideal for high traffic areas. All fasteners are stainless steel, all holes are punched and filled with a steel ring to prevent tearing of the leaf and subsequent sagging, and the adjustable spring units are cast steel double lever. A unique, cadmium plated self aligning bottom bracket allows the door to pivot clear of the floor.

Any size doors can be automated via electro/pneumatic operation, facilitating unrestricted traffic flow without the risk of damage to doors or loads, increasing safety via enhanced visibility and reducing maintenance and repair costs. Doors can be activated by various types of electronic control mechanisms, such as photo-electric cells, microwave radar, radio and induction loops. An adjustable timer is available for controlling the duration of opening. Partial opening, integral limit switches and operator control programmes are also options.

Experienced sales engineers are available to discuss your requirements and carry out a full site survey prior to submitting a competitive quotation for supply only, or supply and installation, utilising our trained installers with full nationwide coverage.

Panels can be manufactured to your exact specification to replace damaged leaves in existing doors and can also be installed if desired. Our contract maintenance service will relieve you of the responsibility of maintenance and repair and enhance the life of all the industrial doors on your site.

QUALITY ASSURED BS EN ISO 9002 QUAY AUDIT LTD ASCB (E) Accrediting Certifying Bodies.

ISO 4011161

dp INDUSTRIAL SERVICES LTD

23b Orgreave Crescent, Dore House Industrial Estate, Sheffield, S13 9NQ
Tel: 0114 288 9464 Fax: 0114 293 9193
E-mail: sales@dpindustrial.f9.co.uk Web site: www.dpindustrial.co.uk

Crash Doors

Features

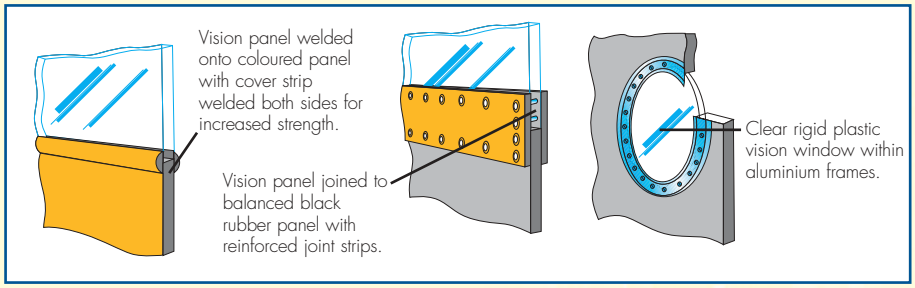

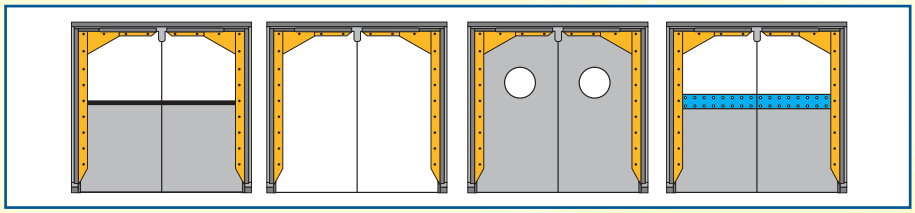

CD1 – Coloured PVC bottom panels of 7 or 10mm thickness with fully transparent clear flexible PVC top panels.

CD2 – Fully transparent clear flexible PVC panels of 7 or 10mm thickness.

CD3 – Black rubber panels 8 or 12mm thickness. Available with clear rigid plastic vision windows within galvanised or alloy frames where required.

CD4 – Black rubber bottom 8 or 12mm thickness. Fitted with transparent clear solid PVC top vision panels with reinforced fittings.

Composition and manufacture

Tubular steel frame with powder coated finish
Full height or half and half PVC or rubber leaves

Size

Bespoke manufacture to customer's specification

Max. opening 4000mm x 4000mm

Sitework

Full service from advice to site survey, manufacture, delivery and installation by our own team of skilled fitters.

The fitting of Crash Doors is quite simple and often undertaken by customers own personnel, as per instructions supplied with the doors. Standard fixing of the top and bottom brackets is to the lintel and floor respectively, but special fittings can be supplied on request.

Contact:

Sales Department

QUALITY ASSURED BS EN ISO 9002 QUAY AUDIT LTD ASCB (E) Accrediting Certifying Bodies.

ISO 4011161

dp INDUSTRIAL SERVICES LTD

Industrial door sales, maintenance, installation and repair
23b Orgreave Crescent, Dore House Industrial Estate, Sheffield, S13 9NQ
Tel: 0114 288 9464 Fax: 0114 293 9193
E-mail: sales@dpindustrial.f9.co.uk Web site: www.dpindustrial.co.uk

PVC Strip Curtains

DP Industrial Services' high specification PVC Strip Curtains are designed for heavy duty internal and external use. Whether you wish to keep heat in or out, Strip Curtains will make a difference to your heating, air conditioning or refrigeration costs. Strip Curtains save energy by, for example, retaining heated air in a building or retaining chilled air in a cold store. When installed behind an external door, the savings are even greater due to the double glazed effect when the door is closed. PVC Strip Curtains can also be used to protect against dust, fumes, spray, pests and noise.

PVC Strip Curtains are the safe solution for entrances with constant pedestrian and motor traffic, as they are fully transparent for maximum visibility. The PVC strips are available in a choice of grades depending on application, from internal pedestrian doorways to heavy duty external vehicular entrances. Polar grade is specifically for use in freezer and low temperature storage areas.

PVC Strip Curtains can be provided with a static or sliding hanging system. The static system uses either stainless or galvanised steel suspension rails which can be soffit or face fixed. This allows for the easy replacement of strips and provides for a single or double overlap as required.

The sliding hanging system uses a rolled steel galvanised track complete with sliding gear and hangers, suitable for all size doorways. The track can be mounted under lintel or face fixed.

Sliding hanging Strip Curtains can be automated via electric operation, facilitating unrestricted traffic flow without the risk of damage to curtains or loads, increasing safety via enhanced visibility and reducing maintenance and repair costs. Curtains can be activated by various types of electronic control mechanisms, such as photo-electric cells, microwave radar, radio and induction loops. An adjustable timer is available for controlling the duration of opening. Partial opening, integral limit switches and operator control programmes are also options.

QUALITY ASSURED BS EN ISO 9002 QUAY AUDIT LTD ASCB (E) Accrediting Certifying Bodies.

ISO 4011161

dp INDUSTRIAL SERVICES LTD

23b Orgreave Crescent, Dore House Industrial Estate, Sheffield, S13 9NQ
Tel: 0114 288 9464 Fax: 0114 293 9193
E-mail: sales@dpindustrial.f9.co.uk Web site: www.dpindustrial.co.uk

PVC Strip Curtains

Features

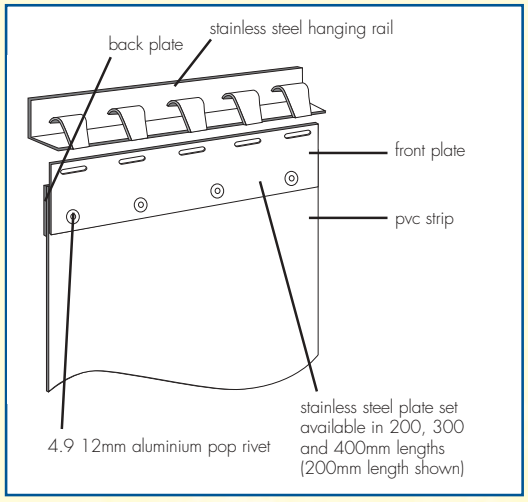

Size

Three standard PVC strip sizes available:

200mm wide x 2mm thick - for small internal openings and pedestrian access

300mm wide x 3mm thick - for normal use and light industrial traffic

400mm wide x 4mm thick - with greater wind resistance for heavy traffic use and external applications

Other widths and thicknesses of PVC strip can be supplied, dependant on application and quantity

Virtually any size of doorway can be fitted, up to a maximum height of 9000mm

Appearance

Standard strips are clear and transparent

Visual markers - red or orange strips

Welding bay curtains - green or bronze strips

Freezer storage areas - Polar grade clear PVC

Sitework

Full service from advice to site survey, manufacture, delivery and installation.

Any additional support steelwork can be designed and fabricated by us in our own purpose built workshop.

Contact:

Sales Department

Experienced sales engineers are available to discuss your requirements and carry out a full site survey prior to submitting a competitive quotation for supply only, or supply and installation, utilising our trained installers with full nationwide coverage.

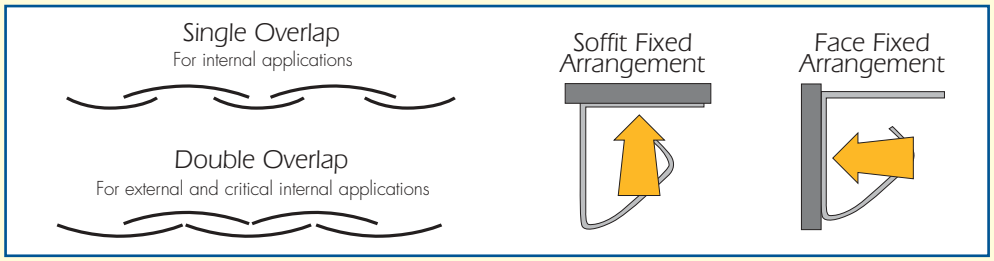

QUALITY ASSURED BS EN ISO 9002 QUAY AUDIT LTD ASCB (E) Accrediting Certifying Bodies.

ISO 4011161

dp INDUSTRIAL SERVICES LTD

Industrial door sales, maintenance, installation and repair
23b Orgreave Crescent, Dore House Industrial Estate, Sheffield, S13 9NQ
Tel: 0114 288 9464 Fax: 0114 293 9193
E-mail: sales@dpindustrial.f9.co.uk Web site: www.dpindustrial.co.uk