Fast Action Doors

dp doors & shutters Ltd high specification Fast Action Doors are designed for external use in high traffic situations. Two versions are available, either roll up or fold up.

In both cases, the door and its associated operating mechanism come as a complete unit, with the electrical drive gear contained within the self supporting frame structure, which can be affixed either externally or internally to the building. This structure also contains the counterbalancing system, utilising weights or springs and making for smooth operation and fast opening of the door in an emergency.

The doors are flexible, being made from self extinguishing, Class 2 polyester fabric, hot sealed by welding and resistant to low temperatures. Transparent PVC windows, treated against ultraviolet rays, and of various sizes can be fitted and a choice of modern colours is available. Any panel contact points are reinforced to minimise wear and tear, and panels can be reinforced with horizontal steel tubes or incorporate a fabric self tensioning mechanism.

Panels fit deep into the vertical guides to minimise air leakage, but draught seals can be specified as an option to assist insulation. Every door incorporates two rows of send and receive photo cell units for safety, which stops the door and returns it to the open position in the event of any obstruction during the closing phase.

Reliable operating controls are essential and the electronic unit integrates control of the electric motor with the safety devices and operating controls. Doors can be activated by various types of remote control mechanisms, such as photo-electric cells, microwave radar, mats and induction loops plus manual push button. An adjustable timer facilitates control of speed of operation and a manual safety device allows opening in the event of power supply failure. Back up batteries are optional.

DHF
Door & Hardware
Federation

GB 00605

dp DOORS & SHUTTERS LTD

23b Orgreave Crescent, Dore House Industrial Estate, Sheffield, S13 9NQ
Tel: 0114 288 9464 Fax: 0114 293 9193
E-mail: sales@dpdoorsandshutters.co.uk Web site: www.dpdoorsandshutters.co.uk

Fast Action Doors

Features

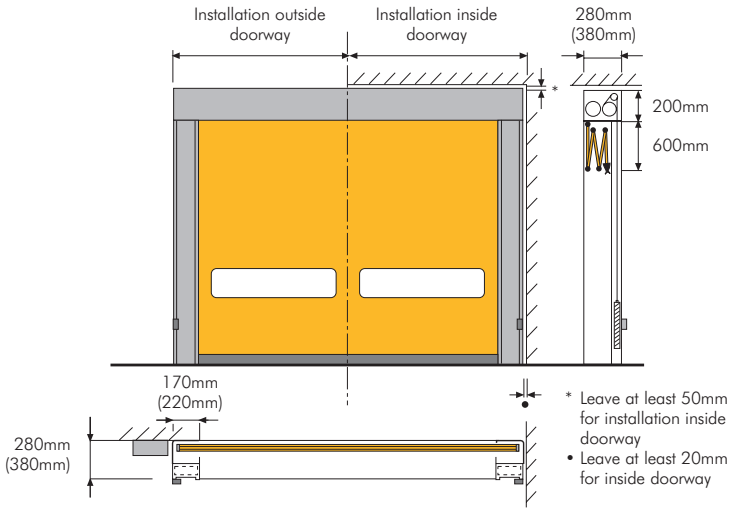

Turbo Fold door with horizontal steel tube reinforcement in fabric and single panel vision windows

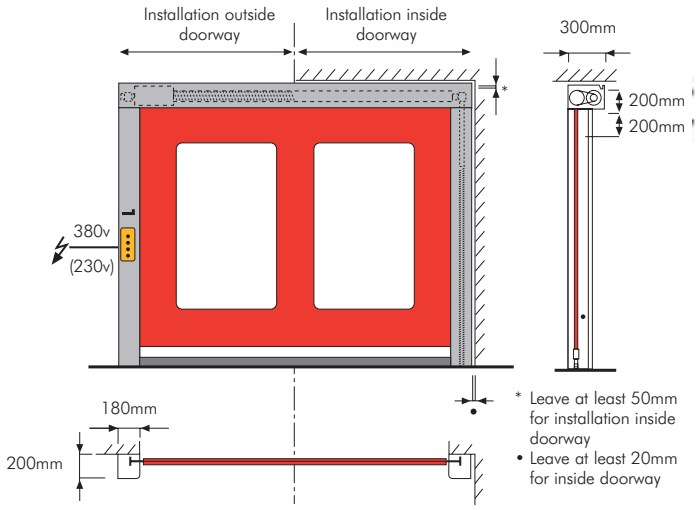

Turbo Roll door with full height vision windows.

Composition and manufacture

Steel frame incorporating electrical drive unit and counterbalancing mechanism.

Fire retardant Class 2 Polyester fabric covering, hot welded, with transparent UV resistant PVC windows.

Power supply - single or three phase depending on electric drive motor. Electric control panel complies with IEC standards, auxiliary control voltage 24V DC.

Opening/closing speeds - dependant on model but typically 1.0-1.3/0.7-1.0m per second.

Semi-automatic or automatic opening.

Manual override opening device in the event of power failure.

Size

Bespoke manufacture to customer's specification.

Max. width 9000mm. Max height 6000mm.

Appearance

Standard galvanised steel frame, panel fabric available in a wide range of colours. Frame can also be supplied in stainless steel or powder coated over galvanised to a colour of your choice.

Sitework

Full service from advice to site survey, manufacture, delivery and installation.

Contact:

Sales Department.

Experienced sales engineers are available to discuss your requirements and carry out a full site survey prior to submitting a competitive quotation for supply only, or supply and installation, utilising our trained installers with full nationwide coverage.

Our contract maintenance service will relieve you of the responsibility of maintenance and repair and enhance the life of all the industrial doors on your site.

DHF
Door & Hardware Federation

TUV

GB 00605

DOORS & SHUTTERS LTD

Industrial door sales, maintenance, installation and repair
23b Orgreave Crescent, Dore House Industrial Estate, Sheffield, S13 9NQ
Tel: 0114 288 9464 Fax: 0114 293 9193
E-mail: sales@dpdoorsandshutters.co.uk Web site: www.dpdoorsandshutters.co.uk