besam™

Besam Revolving Doors with Access Control RD3A1, RD4A1 (One-way) and RD4A2 (Two-way)

Comfort, security and economy

Besam revolving door systems with access control are the answer to many demands full of contradictions: the door needs to be open, but locked, or the door needs to be open without sacrificing climate control or increasing energy costs.

The door is designed to allow authorised persons to pass whilst preventing unauthorised passage. This means that the door functions perfectly as a main entrance, a staff entrance or as the entrance to a restricted area.

And because it is a revolving door, it maintains complete separation between the indoor and outdoor climates. This improves the internal environment by reducing draughts and can also result in energy savings.

Models

Besam revolving door systems with one-way access control (RD3A1 and RD4A1) are available in 3- or 4-wing models. The revolving door system with two-way access control (RD4A2) is available in a 4-wing model.

Design

The doors can be ordered in several different configurations depending on the customer's needs. There are two options for the outer drum and three different types of door leaves to choose from, each with a different look and feel. Depending on the rail and panel options selected, the door can produce varying degrees of interior privacy.

The doors are available in various sizes with flexible internal height and fascia height to match any building.

All of our revolving door systems are made from Besam-designed aluminium profiles, which can be anodized, powder-coated or stainless steel-clad.

The drive mechanism is fitted on a frame above the laminated ceiling. The drive shaft bearing is fixed to the finished floor. Brushes seal the door tightly. The doors are designed to be placed and fixed directly onto the finished floor surface. No special foundations are required. For unfinished floors, a ground ring is available as an option.

Frame system

Slim system with shaft

Slim system without shaft

Safety

The door range combines safety with security and practicality.

The drum edges are equipped with soft safety edges to prevent people from being trapped between the stationary drum and the rotating door leaves.

The rotating section is "force sensitive". This means that if something prevents the door leaves from rotating, the rotation will stop for a brief time before starting again.

Standard safety features

- If an obstacle prohibits the rotation of the door (the resistance is higher than the pre-set value), the rotation will cease
- Compressible vertical safety switches placed on the drum edges
- Speed control
- Electromechanical as well as mechanical drive arm release allows the door to rotate free when activated
- Electromechanical drive arm release can be integrated with a fire alarm system

Access control system

The control system was developed by Besam specifically for use with its products, and the result is a fully integrated entrance solution with no compromise in design or function. The system ensures lowest operating/maintenance cost, highest safety and best availability.

On receipt of a validated authorisation signal from the access control system, the door starts to rotate. The authorised person enters the door and the detection system allows him to pass. If an unauthorised person tries to follow in the next compartment, the door allows the authorised person through, then stops and reverses leaving the unauthorised person without access to the restricted area.

If many people want to go through the door at the same time, the system can queue up to 5 persons with a RD3A1 or RD4A1 and up to 10 persons with a RD4A2 between the access control device and the door.

Evacuation path

By adding the emergency break-out system, a clear, unimpeded evacuation path through the revolving door can be achieved. The break-out system can be integrated with a fire alarm system. The unique design also ensures that the door leaves collapse only when required and not under wind pressure.

The break-out system can also be very useful under less dramatic circumstances, for example when bringing long objects through the entrance.

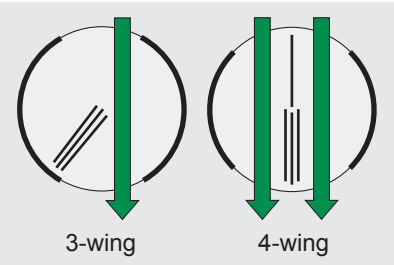

Two-way Access Control Door: RD4A2

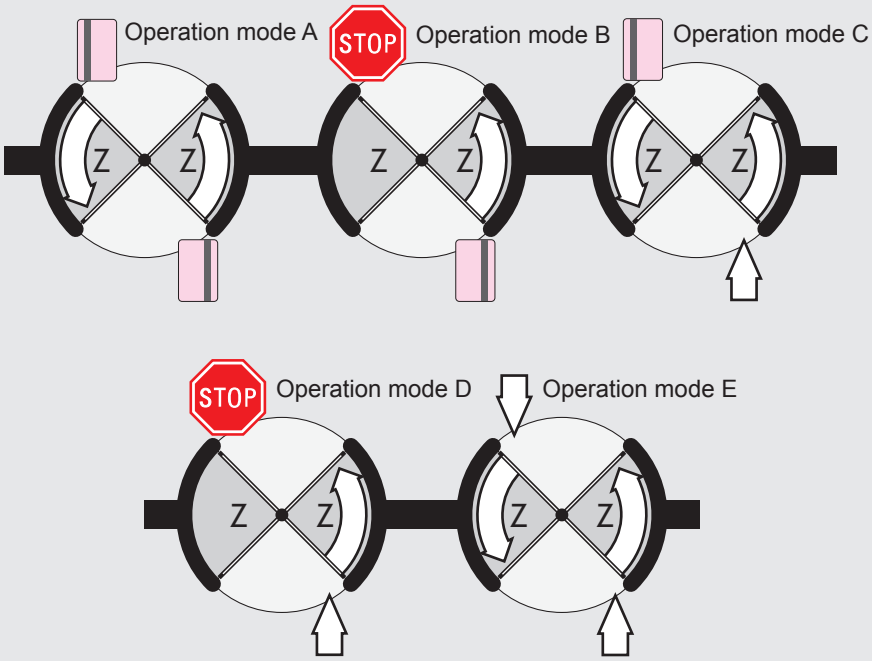

Detection system

The detection system is a contact mat detection system. The areas covered by the contact mats are marked with Z.

Operation modes

The following modes of operation are built into the system:

A Access-controlled traffic in *both* directions (RD4A2 only)
B Access-controlled traffic in one direction and no traffic in the other direction (RD4A2 only)
C Access-controlled traffic in one direction and free traffic in the other direction
D Free traffic in one direction and no traffic in the other direction
E Free traffic in both directions

With all these different operational modes, the different systems are well-suited to work as a normal revolving door as well as an access controlled entrance.

One-way Access Control Door: RD3A1 or RD4A1

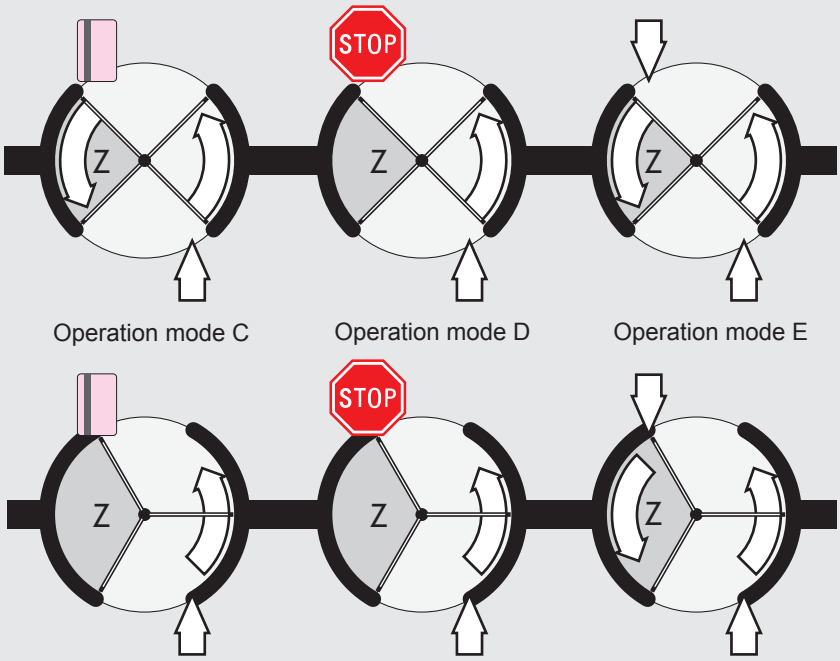

Two-way Access Control

RD4A2

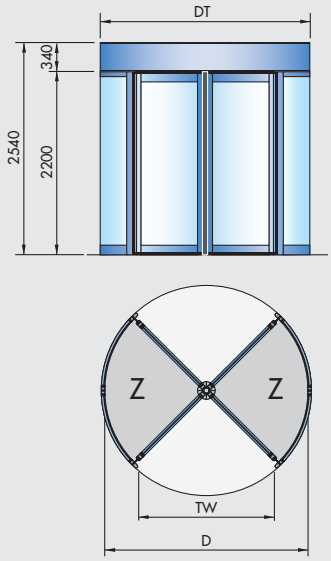

D	DT	TW
1800	1888	1191
2100	2188	1403
2400	2488	1615

One-way Access Control

RD3A1

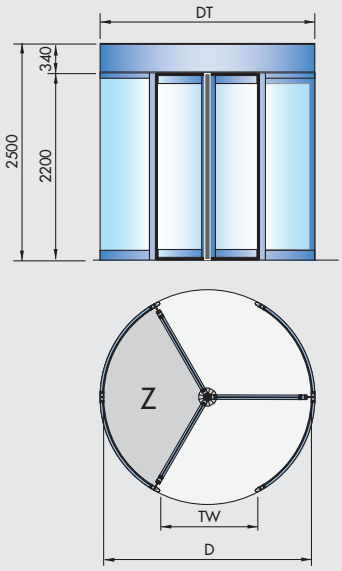

D	DT	TW
1800	1888	793
2100	2188	943
2400	2488	1093

RD4A1

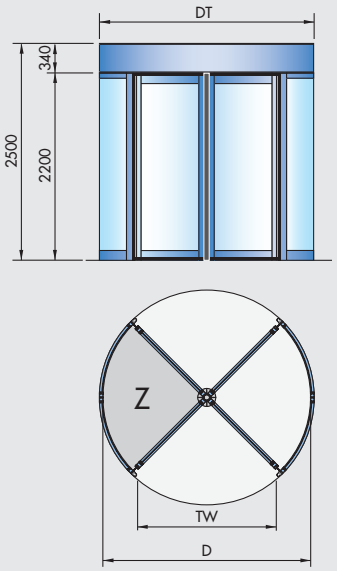

D	DT	TW
1800	1888	1191
2100	2188	1403
2400	2488	1615

Technical data besam RD3A1, RD4A1 and RD4A2

Standard equipment
- Automatic drive
- Control unit built-in behind the fascia above the inside entrance
- Microprocessor controlled with plug-in modules and status display
- Vertical safety switches
- Glass wall:
  4 + 4 mm clear laminated (Frame/Slim)
- Glass door leaves:
  3 + 3 mm laminated/tempered (Frame)
  6 + 6 mm laminated/tempered (Slim)
  Other types of glass available
- Door sections made from aluminium profiles
- Ceiling made from white laminated panels
- Dust protection roof made from white laminated panels
- Connections for detection systems
- Electromechanical drive arm release
- Mechanical drive arm release

Accessories and Options
- Besam activators
- Powder-coated finish (RAL colours)
- Anodizing, clear or bronze
- Stainless steel cladding
- Night closing doors (NCD), manual or automatic.
- Emergency stop
- Mechanical lock NCD
- Fascia, non-standard height (340 - 1250 mm)
- Internal height non-standard (2100 - 2600 mm)
- Sheet metal sandwich panel or fully-clad instead of glass (Frame only)
- Spotlights/Downlights
- Water-resistant cover
- Emergency break-out system with electromechanical release
- Midrails on door leaves or and/or outer walls
- Hang sensor on the rotating part
- Detection system
- Additional safety on rotating part
- Ground ring for unfinished floor
- Remote program selectors
- Various options for ceiling surface

Technical specifications
- Power supply:
  220/240 V, 50 Hz
  110/120 V, 60 Hz
- Power consumption: 220 W
- Lighting: 12 V, 120 W
- Mains fuse: 10 A

Besam Ltd. Washington House, Brooklands Close, Sunbury on Thames, Middlesex TW16 7EQ
Tel: +44 1932 765 888 Fax: +44 1932 765 864
info@besam.co.uk • www.besam.com

IAA074B0GB – Issue 2005-07-08 – Rights reserved for modifications of design and dimensions